TCT 通测检测
TESTING CENTRE TECHNOLOGY

Test Report

Test Report No. .....:	TCT250324E013	
Date of issue .....:	Jun. 16, 2025	
Testing laboratory.....:	Shenzhen TCT Testing Technology Co., Ltd.	
Testing location/ address:	2101 & 2201, Zhenchang Factory, Renshan Industrial Zone, Fuhai Subdistrict, Bao'an District, Shenzhen, Guangdong, China	
Applicant's name .....:	Shenzhen Huafurui Technology Co., Ltd.	
Address .....:	Unit 601-03, 6/F, Block A, Building 1, Ganfeng Technology Building, No. 993 Jiaxian Road, Xiangjiaotang Community, Bantian Street, Longgang District, Shenzhen, P.R. China	
Manufacturer's name.....:	Shenzhen Huafurui Technology Co., Ltd.	
Address .....:	Unit 601-03, 6/F, Block A, Building 1, Ganfeng Technology Building, No. 993 Jiaxian Road, Xiangjiaotang Community, Bantian Street, Longgang District, Shenzhen, P.R. China	
Standard(s).....:	ETSI EN 300 328 V2.2.2 (2019-07)	
Product Name .....:	Smartphone	
Trade Mark.....:	CUBOT	
Model/Type reference .....:	X100	
Rating(s) .....:	Refer to EUT description of page 3	
Date of receipt of test item .....:	Mar. 24, 2025	
Date (s) of performance of test .....:	Mar. 24, 2025 ~ Jun. 16, 2025	
Tested by (+signature)....:	Aaron MO	Aaron
Check by (+signature) ....:	Beryl ZHAO	Beryl
Approved by (+signature):	Tomsin	Tomsin

General disclaimer:

This report shall not be reproduced except in full, without the written approval of Shenzhen TCT Testing Technology Co., Ltd.. This document may be altered or revised by Shenzhen TCT Testing Technology Co., Ltd. personnel only, and shall be noted in the revision section of the document. The test results in the report only apply to the tested sample.

Hotline: 400-6611-140 Tel: 86-755-27673339 Fax: 86-755-27673332 http://www.tct-lab.com

TABLE OF CONTENTS

1. General Product Information 3
1.1. EUT description 3
1.2. Model(s) list 3
1.3. Operation Frequency 4
2. Test Result Summary 5
3. General Information 7
3.1. Test environment and mode 7
3.2. Description of Support Units 7
3.3. Test Instruments List 8
4. Test Facilities 9
5. Measurement Uncertainty 9
6. Transmit Requirement 10
6.1. RF Output Power 10
6.2. Power Spectral Density 13
6.3. Occupied Channel Bandwidth 16
6.4. Transmitter Unwanted Emissions In The OOB Domain 19
6.5. Transmitter unwanted emissions in the spurious domain 23
7. Receive Requirement 28
7.1. Spurious Emissions 28
7.2. Receiver Blocking 33
8. Photographs of Test Configuration 39
9. Photographs of EUT 40
ANNEX E 41
E.1 Information as required by EN 300 328 V2.2.2, clause 5.4.1 41

1. General Product Information

1.1. EUT description

Product Name ..... :	Smartphone
Model/Type reference ..... :	X100
Hardware Version ..... :	3370V-MQ V1
Software Version..... :	CUBOT_X100_F031C_V01
Receiver Category ..... :	Category 3 (According to item 6.1)
BT Version..... :	V5.0 (This report is for BLE)
Operation Frequency..... :	2402MHz~2480MHz
Number of Channel..... :	40
Modulation Type ..... :	GFSK
Antenna Type ..... :	FPC Antenna
Antenna Gain ..... :	-1dBi
Rating(s) ..... :	Adapter Information 1: Model: TD-203G200170VF01 Input: AC 100-240V, 50/60Hz, 0.6A Output: DC 5V, 3A/ DC 9V, 3A/ DC 12V, 2.5A/ DC 15V, 2A/ DC 20V, 1.5A PPS: DC 3.3-16V, 2A/ DC 3.3-11V, 3A Total Output Power: 33W Max Adapter Information 2: Model: HJ-PD33W-EU Input: AC 100-240V, 50/60Hz, 0.8A Output: DC 5.0V, 3.0A, 15.0W or DC 9.0V, 3.0A, 27.0W or DC 12.0V, 2.75A, 33.0W MAX Rechargeable Li-polymer Battery DC 3.87V

Note: The antenna gain listed in this report is provided by applicant, and the test laboratory is not responsible for this parameter.

1.2. Model(s) list

None.

1.3. Operation Frequency

Channel	Frequency	Channel	Frequency	Channel	Frequency	Channel	Frequency
0	2402MHz	11	2424MHz	22	2446MHz	33	2468MHz
1	2404MHz	12	2426MHz	23	2448MHz	34	2470MHz
2	2406MHz	13	2428MHz	24	2450MHz	35	2472MHz
3	2408MHz	14	2430MHz	25	2452MHz	36	2474MHz
4	2410MHz	15	2432MHz	26	2454MHz	37	2476MHz
5	2412MHz	16	2434MHz	27	2456MHz	38	2478MHz
6	2414MHz	17	2436MHz	28	2458MHz	39	2480MHz
7	2416MHz	18	2438MHz	29	2460MHz		
8	2418MHz	19	2440MHz	30	2462MHz		
9	2420MHz	20	2442MHz	31	2464MHz		
10	2422MHz	21	2444MHz	32	2466MHz		

The EUT operation in above frequency list, and used test software to control the EUT for staying in continuous transmitting and receiving mode. So test frequency is below:

Test channel	**Frequency (MHz)**
	GFSK
Lowest channel	2402MHz
Middle channel	2440MHz
Highest channel	2480MHz

Hotline: 400-6611-140 Tel: 86-755-27673339 Fax: 86-755-27673332 http://www.tct-lab.com

2. Test Result Summary

Radio Spectrum Matter (RSM) Part of Tx					
Test Item	**Test Requirement**	**Test Method**	**Limit/Severity**	**Uncertainty**	**Result**
RF Output Power	Clause 4.3.2.2	Clause 5.4.2.2	20dBm	±1.5dB	PASS
Power Spectral Density	Clause 4.3.2.3	Clause 5.4.3.2	10dBm/MHz	±3dB	PASS
Duty Cycle, Tx-sequence, Tx-gap	Clause 4.3.2.4	Clause 5.4.2.2	Clause 4.3.2.4.3	±5 %	N/A
Medium Utilisation (MU) factor	Clause 4.3.2.5	Clause 5.4.2.2	≤ 10%	±5 %	N/A
Adaptivity	Clause 4.3.2.6	Clause 5.4.6.2	Clause 4.3.2.6.2.2 & Clause 4.3.2.6.3.2 & Clause 4.3.2.6.4.2	--	N/A
Occupied Channel Bandwidth	Clause 4.3.2.7	Clause 5.4.7.2	Clause 4.3.2.7.3	±5 %	PASS
Transmitter unwanted emissions in the OOB domain	Clause 4.3.2.8	Clause 5.4.8.2	Clause 4.3.2.8.3	±3dB	PASS
Transmitter unwanted emissions in the spurious domain	Clause 4.3.2.9	Clause 5.4.9.2	Clause 4.3.2.9.3	±4.28dB	PASS

Radio Spectrum Matter (RSM) Part of Rx					
Test Item	**Test Requirement**	**Test Method**	**Limit/Severity**	**Uncertainty**	**Result**
Receiver spurious emissions	Clause 4.3.2.10	Clause 5.4.10.2	Clause 4.3.2.10.3	±4.28dB	PASS
Receiver Blocking	Clause 4.3.2.11	Clause 5.4.11.2	Clause 4.3.2.11.4	--	PASS

Note:

1 PASS: Test item meets the requirement.

2. N/A: Test case does not apply to the test object.

3. The test result judgment is decided by the limit of test standard.

4. Tx: In this whole report Tx (or tx) means Transmitter.

Rx: In this whole report Rx (or rx) means Receiver.

Temperature (Uncertainty): ±1°C Humidity(Uncertainty): ±5%

Uncertainty: ± 3%(for DC and low frequency voltages)

3. General Information

3.1. Test environment and mode

Item	Normal condition	Extreme condition	
		HT	LT
Temperature	+25ºC	+35ºC	-20ºC
Voltage	DC 3.87V		
Humidity	20%-95%		
Atmospheric Pressure:	1008 mbar		
Test Mode:			
Transmitting mode:	Keep the EUT in transmitting mode with modulation.		
Receiving mode:	Keep the EUT in receiving mode.		
Remark:	The both batteries (3.85V battery and 3.8V battery) were tested, and the worst result (3.85V battery) is recorded.		

3.2. Description of Support Units

The EUT has been tested as an independent unit together with other necessary accessories or support units. The following support units or accessories were used to form a representative test configuration during the tests.

Equipment	Model No.	Serial No.	FCC ID	Trade Name
/	/	/	/	/

Note:

1. All the equipment/cables were placed in the worst-case configuration to maximize the emission during the test.

2. Grounding was established in accordance with the manufacturer's requirements and conditions for the intended use.

3.3. Test Instruments List

Radiated Emission				
Name	**Model No.**	**Manufacturer**	**Date of Cal.**	**Due Date**
EMI Test Receiver	ESCI7	R&S	Jan. 21, 2025	Jan. 20, 2026
Spectrum Analyzer	FSQ40	R&S	Jun. 27, 2024	Jun. 26, 2025
Pre-amplifier	8447D	HP	Jun. 27, 2024	Jun. 26, 2025
Pre-amplifier	LNPA_0118G-45	SKET	Jan. 21, 2025	Jan. 20, 2026
Pre-amplifier	LNPA_1840G-50	SKET	Jan. 21, 2025	Jan. 20, 2026
Broadband Antenna	VULB9163	Schwarzbeck	Jun. 29, 2024	Jun. 28, 2025
Horn Antenna	BBHA 9120D	Schwarzbeck	Jun. 29, 2024	Jun. 28, 2025
Horn Antenna	BBHA 9170	Schwarzbeck	Jan. 23, 2025	Jan. 22, 2026
Coaxial cable	RE-03-D	SKET	Jun. 27, 2024	Jun. 26, 2025
Coaxial cable	RE-03-M	SKET	Jun. 27, 2024	Jun. 26, 2025
Coaxial cable	RE-03-L	SKET	Jun. 27, 2024	Jun. 26, 2025
Coaxial cable	RE-04-D	SKET	Jun. 27, 2024	Jun. 26, 2025
Coaxial cable	RE-04-M	SKET	Jun. 27, 2024	Jun. 26, 2025
Coaxial cable	RE-04-L	SKET	Jun. 27, 2024	Jun. 26, 2025
Loop antenna	FMZB1519B	Schwarzbeck	Jun. 27, 2024	Jun. 26, 2025
EMI Test Software	FA-03A2 RE+	EZ_EMC	/	/

Conducted Emission				
Name	**Model No.**	**Manufacturer**	**Date of Cal.**	**Due Date**
Spectrum Analyzer	N9020A	KEYSIGHT	Jan. 21, 2025	Jan. 20, 2026
Signal Generator	N5182A	Agilent	Jun. 27, 2024	Jun. 26, 2025
Power Sensor Box	TCT-RF-001	MWRFtest	Jun. 27, 2024	Jun. 26, 2025
Combiner Box	AT890-RFB	Ascentest	/	/
Wideband Radio Communication Tester	CMW500	R&S	Jan. 21, 2025	Jan. 20, 2026
Programable tempratuce and humidity chamber	JQ-2000	JQ	Jun. 27, 2024	Jun. 26, 2025
DC Power Supply	KR3005K	Kingrang	Jun. 27, 2024	Jun. 26, 2025

4. Test Facilities

Shenzhen TCT Testing Technology Co., Ltd.
Address: 2101 & 2201, Zhenchang Factory, Renshan Industrial Zone, Fuhai Subdistrict, Bao'an District, Shenzhen, Guangdong, China
TEL: +86-755-27673339

5. Measurement Uncertainty

The reported uncertainty of measurement y ± U, where expended uncertainty U is based on a standard uncertainty multiplied by a coverage factor of k=2, providing a level of confidence of approximately 95 %.

No.	Item	MU
1	RF power, conducted	± 0.12 dB
2	Spurious emissions, conducted	± 0.11 dB
3	All emissions, radiated(<1 GHz)	± 4.56 dB
4	All emissions, radiated(1 GHz - 18 GHz)	± 4.22 dB
5	Temperature	± 0.1 °C
6	Humidity	± 1.0 %

6. Transmit Requirement

6.1. RF Output Power

6.1.1. Test Specification

Test Requirement:	ETSI EN 300 328 clause 4.3.2.2
Test Method:	ETSI EN 300 328 clause 5.4.2.2.1
Limit:	20dBm
Test Setup:	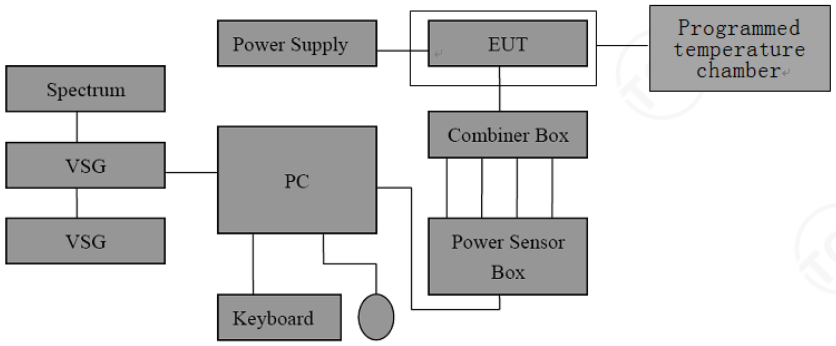
Test Procedure:	**Step 1:** Use a fast power sensor suitable for 2,4 GHz and capable of 1 MS/s. Use the following settings: - Sample speed 1 MS/s or faster. - The samples must represent the power of the signal. - Measurement duration: For non-adaptive equipment: equal to the observation period defined in clauses 4.3.1.3.2 or 4.3.2.4.2. For adaptive equipment, the measurement duration shall be long enough to ensure a minimum number of bursts (at least 10) are captured. ***Note 1:*** *For adaptive equipment, to increase the measurement accuracy, a higher number of bursts may be used.* **Step 2:** For conducted measurements on devices with one transmit chain: -Connect the power sensor to the transmit port, sample the transmit signal and store the raw data. Use these stored samples in all following steps. For conducted measurements on devices with multiple transmit chains: -Connect one power sensor to each transmit port for a synchronous measurement on all transmits ports. -Trigger the power sensors so that they start sampling at the same time. Make sure the time difference between the samples of all sensors is less than half the time between two samples.

	-For each instant in time, sum the power of the individual samples of all ports and store them. Use these stored samples in all following steps. **Step 3:** Find the start and stop times of each burst in the stored measurement samples. ***Note 2:*** *The start and stop times are defined as the points where the power is at least 20 dB below the RMS burst power calculated in step 4.* **Step 4:** Between the start and stop times of each individual burst calculate the RMS power over the burst. Save these Pburst values, as well as the start and stop times for each burst. $P_{burst} = \frac{1}{k}\sum_{n=1}^{k} P_{sample}(n)$ **Step 5:** The highest of all Pburst values (value "A" in dBm) will be used for maximum e.i.r.p. calculations. **Step 6:** Add the (stated) antenna assembly gain "G" in dBi of the individual antenna. If applicable, add the additional beamforming gain "Y" in dB. If more than one antenna assembly is intended for this power setting, the maximum overall antenna gain (G or G + Y) shall be used. The RF Output Power (P) shall be calculated using the formula below: P = A + G + Y
Test Instrument:	Refer to Item 3.3
Test Result:	PASS

Hotline: 400-6611-140 Tel: 86-755-27673339 Fax: 86-755-27673332 http://www.tct-lab.com

6.1.2. Test Data

GFSK
(1M)

Test Conditions	Channel	Burst Number	Max Burst RMS Power (dBm)	Max EIRP (dBm EIRP)	Limit (dBm EIRP)	Result
Normal	Lowest	25	-8.08	-9.08	20	PASS
	Middle	25	-6.02	-7.02		
	Highest	25	-6.53	-7.53		
NVHT	Lowest	25	-8.11	-9.11		
	Middle	25	-6.06	-7.06		
	Highest	25	-6.55	-7.55		
NVLT	Lowest	25	-8.12	-9.12		
	Middle	25	-6.03	-7.03		
	Highest	25	-6.57	-7.57		

Note: *1>. V= Voltage, T= Temperature, N=Normal*
2>. Cable Loss=0.5dB, Antenna Gain= -1dBi, this factors have been set in test software.

(2M)

Test Conditions	Channel	Burst Number	Max Burst RMS Power (dBm)	Max EIRP (dBm EIRP)	Limit (dBm EIRP)	Result
Normal	Lowest	25	-8.06	-9.06	20	PASS
	Middle	25	-6.01	-7.01		
	Highest	25	-6.54	-7.54		
NVHT	Lowest	25	-8.09	-9.09		
	Middle	25	-6.05	-7.05		
	Highest	25	-6.58	-7.58		
NVLT	Lowest	25	-8.13	-9.13		
	Middle	25	-6.04	-7.04		
	Highest	25	-6.57	-7.57		

Note: *1>. V= Voltage, T= Temperature, N=Normal*
2>. Cable Loss=0.5dB, Antenna Gain= -1dBi, this factors have been set in test software.

6.2. Power Spectral Density

6.2.1. Test Specification

Test Requirement:	ETSI EN 300 328 clause 4.3.2.3
Test Method:	ETSI EN 300 328 clause 5.4.3.2.1
Limit:	10dBm/MHz
Test setup:	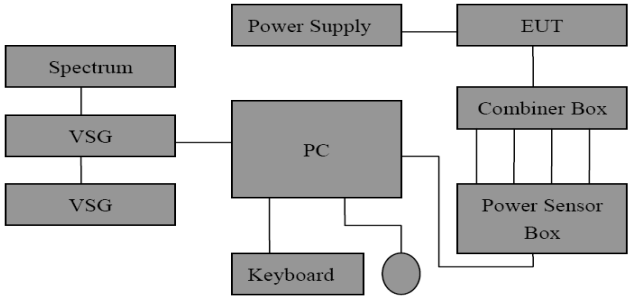
Test procedure:	**Step 1:** Connect the UUT to the spectrum analyser and use the following settings: Start Frequency: 2400 MHz Stop Frequency: 2483.5 MHz Resolution BW: 10 kHz Video BW: 30 kHz Sweep Points: > 8350 NOTE:For spectrum analysers not supporting this number of sweep points, the frequency band may be segmented. Detector: RMS Trace Mode: Max Hold Sweep time: 10 s; the sweep time may be increased further until a value where the sweep time has no impact on the RMS value of the signal For non-continuous signals, wait for the trace to be completed. Save the (trace) data set to a file. **Step 2:** For conducted measurements on smart antenna systems using either operating mode 2 or 3 (see clause 5.1.3.2), repeat the measurement for each of the transmit ports. For each frequency point, add up the amplitude (power) values for the different transmit chains and use this as the new data set. **Step 3:** Add up the values for amplitude (power) for all the samples in the file. **Step 4:** Normalize the individual values for amplitude so that the sum is equal to the RF Output Power (e.i.r.p.) measured

	in clause 5.3.2. **Step 5:** Starting from the first sample in the file (lowest frequency), add up the power of the following samples representing a 1 MHz segment and record the results for power and position (i.e. sample #1 to #100). This is the Power Spectral Density (e.i.r.p.) for the first 1 MHz segment which shall be recorded. **Step 6:** Shift the start point of the samples added up in step 5 by 1 sample and repeat the procedure in step 5 (i.e. sample #2 to #101). **Step 7:** Repeat step 6 until the end of the data set and record the radiated Power Spectral Density values for each of the 1 MHz segments.
Test Instruments:	Refer to Item 3.3
Test Mode:	Transmitting mode
Test Result	PASS

6.2.2. Test Data

(1M)

Frequency (MHz)	Max PSD [dBm/MHz(EIRP)]	Limit [dBm/MHz(EIRP)]	Result
2402	-9.14	10	PASS

Frequency (MHz)	Max PSD [dBm/MHz(EIRP)]	Limit [dBm/MHz(EIRP)]	Result
2440	-7.08	10	PASS

Frequency (MHz)	Max PSD [dBm/MHz(EIRP)]	Limit [dBm/MHz(EIRP)]	Result
2480	-7.59	10	PASS

(2M)

Frequency (MHz)	Max PSD [dBm/MHz(EIRP)]	Limit [dBm/MHz(EIRP)]	Result
2402	-10.28	10	PASS

Frequency (MHz)	Max PSD [dBm/MHz(EIRP)]	Limit [dBm/MHz(EIRP)]	Result
2440	-8.23	10	PASS

Frequency (MHz)	Max PSD [dBm/MHz(EIRP)]	Limit [dBm/MHz(EIRP)]	Result
2480	-8.76	10	PASS

6.3. Occupied Channel Bandwidth

6.3.1. Test Specification

Test Requirement:	ETSI EN 300 328 clause 4.3.2.7
Test Method:	ETSI EN 300 328 clause 5.4.7.2
Limit:	The Occupied Channel Bandwidth for each hopping frequency shall fall completely within the band 2400MHz ~ 2483.5MHz.
Test Setup:	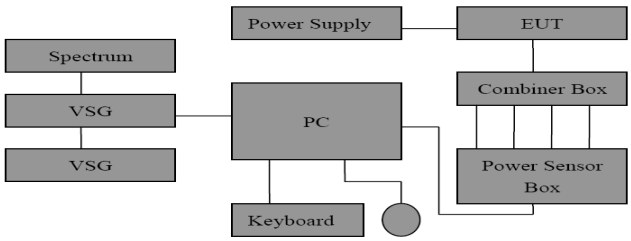
Test Mode:	Transmitting mode
Test Procedure:	**Step 1:** Connect the UUT to the spectrum analyzer and use the following settings: Centre Frequency: The centre frequency of the channel under test Resolution BW: ~ 1 % of the span without going below 1 % Video BW: 3 × RBW Frequency Span for frequency hopping equipment: Lowest frequency separation that is used within the hopping sequence Frequency Span for other types of equipment: 2 × Nominal Channel Bandwidth (e.g. 40 MHz for a 20 MHz channel) Detector Mode: RMS Trace mode: Max Hold Trace mode: 1s **Step 2:** Wait for the trace is completed. Find the peak value of the trace and place the analyzer marker on this peak. **Step 3:** Use the 99 % bandwidth function of the spectrum analyzer to measure the Occupied Channel Bandwidth of the UUT. This value shall be recorded. ***Note:*** *Make sure that the power envelope is sufficiently above the noise floor of the analyzer to avoid the noise signals left and right from the power envelope being taken into account by this measurement.*
Test Instrument:	Refer to Item 3.3
Test Result:	PASS

6.3.2. Test data

(1M)

Modulation Type	Test Channel	99% Bandwidth (MHz)	Declared Bandwidth (MHz)	F_L/F_H (MHz)	Limit	Result
GFSK	Lowest	1.04	1.0	2401.48	2400MHz ~ 2483.5MHz	PASS
	Highest	1.04	1.0	2480.52		PASS

Test plots as follows:

Modulation Type:	GFSK	Test Channel:	Lowest Channel

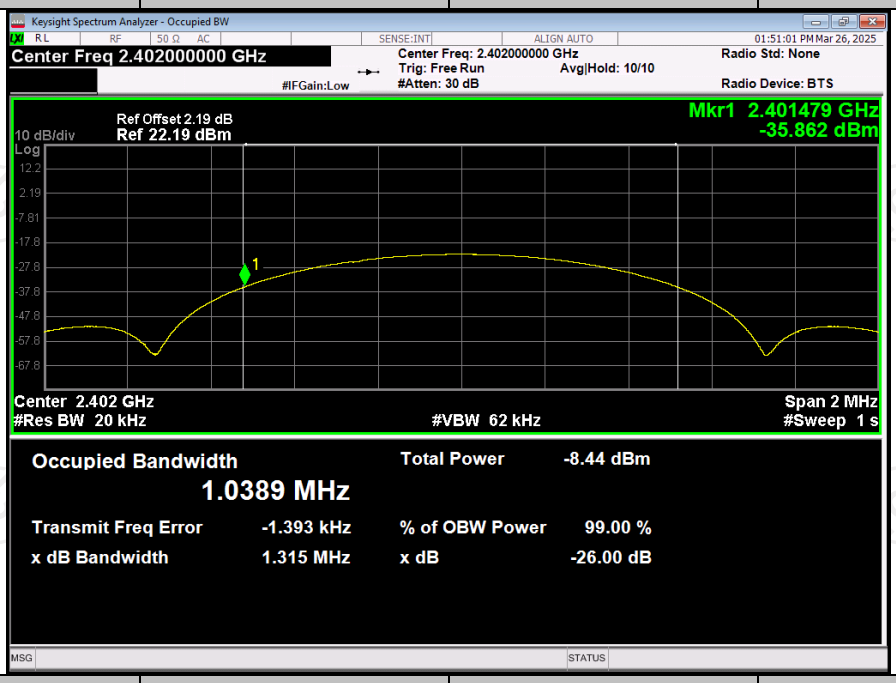

Modulation Type:	GFSK	Test Channel:	Highest Channel

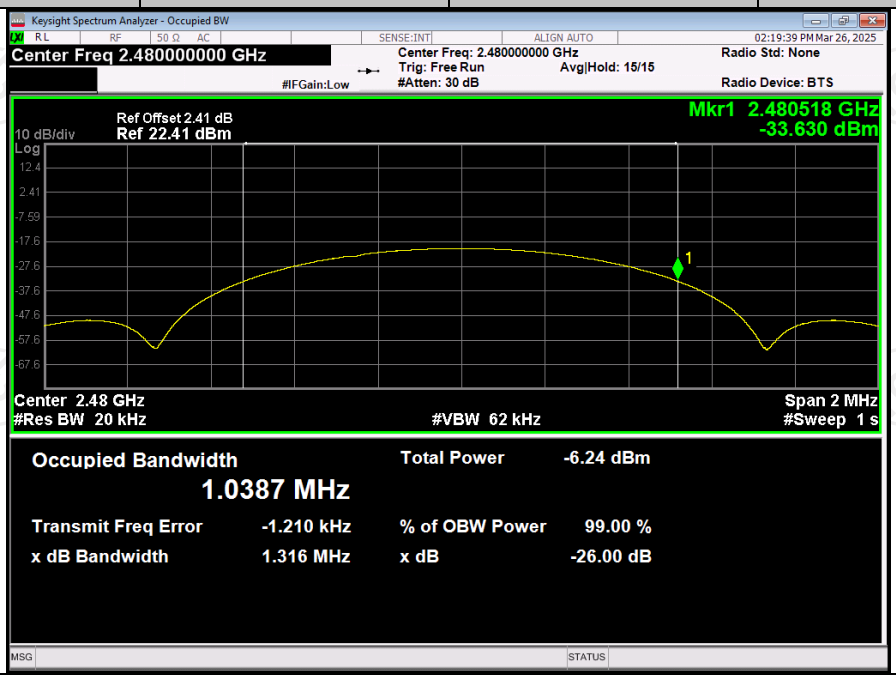

(2M)

Modulation Type	Test Channel	99% Bandwidth (MHz)	Declared Bandwidth (MHz)	F_L/F_H (MHz)	Limit	Result
GFSK	Lowest	2.08	2.0	2400.96	2400MHz ~ 2483.5MHz	PASS
	Highest	2.08	2.0	2481.04		PASS

Test plots as follows:

Modulation Type:	GFSK	Test Channel:	Lowest Channel

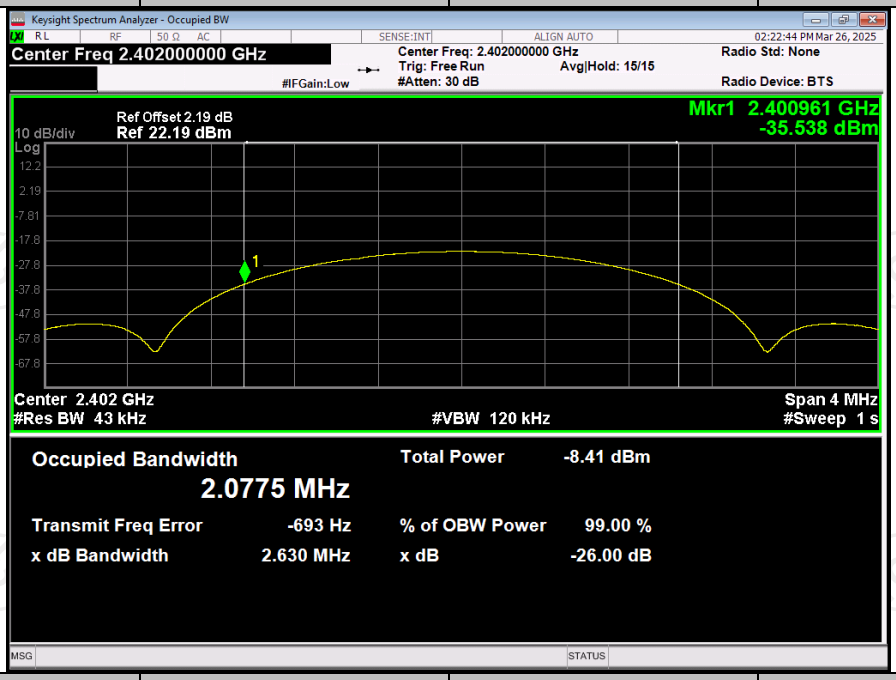

Modulation Type:	GFSK	Test Channel:	Highest Channel

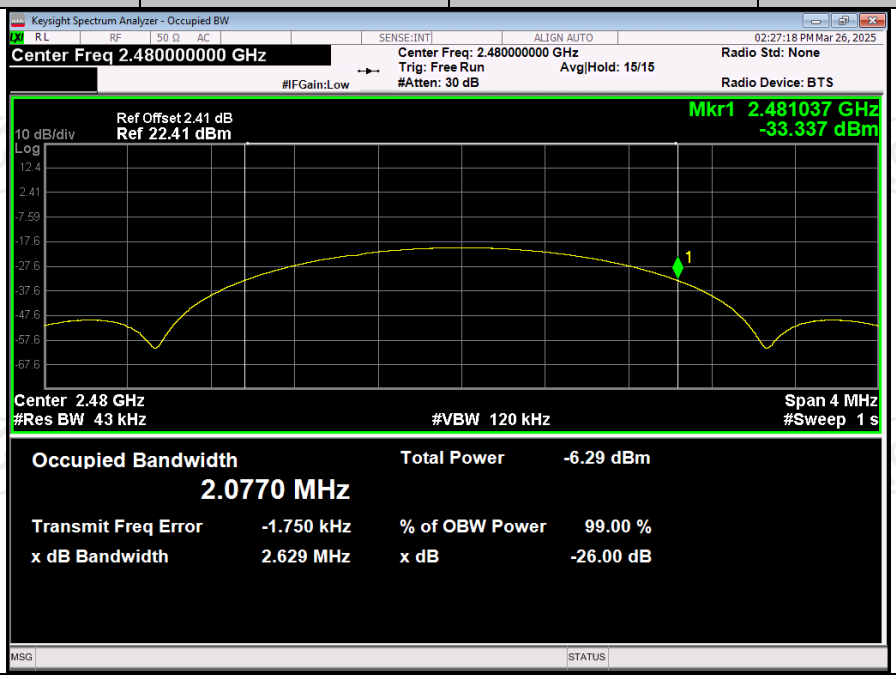

6.4. Transmitter Unwanted Emissions In The OOB Domain

6.4.1. Test Specification

Test Requirement:	ETSI EN 300 328 clause 4.3.2.8
Test Method:	ETSI EN 300 328 clause 5.4.8.2
Limit:	The transmitter unwanted emissions in the out-of-band domain but outside the allocated band, shall not exceed the values provided by the mask in figure 1. 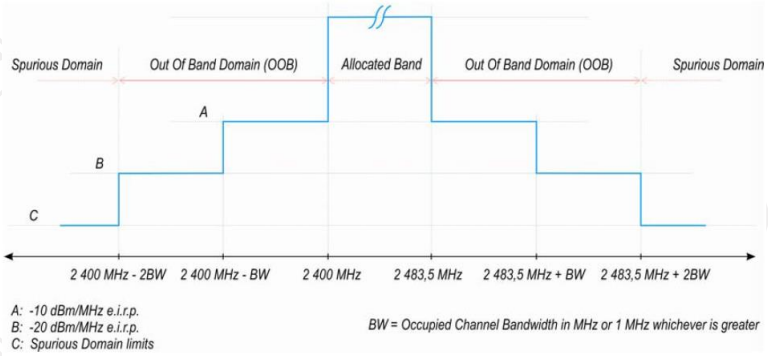 **Figure 1: Transmit mask**
Test Setup:	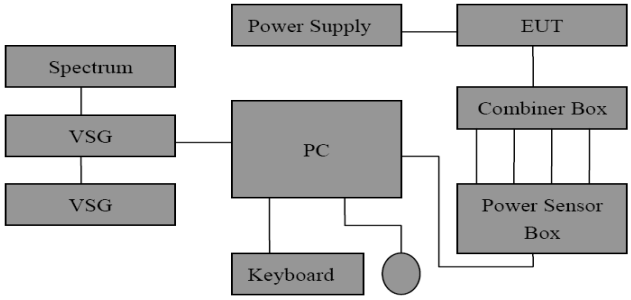
Test Mode:	Transmitting mode
Test Procedure:	The applicable mask is defined by the measurement results from the tests performed under clause 5.4.7 (Occupied Channel Bandwidth). The Out-of-band emissions within the different horizontal segments of the mask provided in figures 1 and 3 shall be measured using the steps below. This method assumes the spectrum analyser is equipped with the Time Domain Power option. **Step 1:** Connect the UUT to the spectrum analyser and use the following settings: Centre Frequency: 2 484 MHz Span: 0 Hz Resolution BW: 1 MHz Filter mode: Channel filter Video BW: 3 MHz

Detector Mode:	RMS
Trace Mode:	Max Hold
Sweep Mode:	Continuous
Sweep Points:	Sweep Time [s] / (1µs) or 5000 whichever is greater
Trigger Mode:	Video trigger

Note1: *In case video triggering is not possible, an external trigger source may be used.*

Sweep Time:	>120% of the duration of the longest detected during the measurement of the RF Output Power

Step 2: (segment 2 483,5 MHz to 2 483,5 MHz + BW)

Adjust the trigger level to select the transmissions with the highest power level.

For frequency hopping equipment operating in a normal hopping mode, the different hops will result in signal bursts with different power levels. In this case the burst with the highest power level shall be selected.

Set a window (start and stop lines) to match with the start and end of the burst and in which the RMS power shall be measured using the Time Domain Power function.

Select RMS power to be measured within the selected window and note the result which is the RMS power within this 1 MHz segment (2 483,5 MHz to 2 484,5 MHz). Compare this value with the applicable limit provided by the mask.

Increase the centre frequency in steps of 1 MHz and repeat this measurement for every 1 MHz segment within the range 2 483,5 MHz to 2 483,5 MHz + BW. The centre frequency of the last 1 MHz segment shall be set to 2 483,5 MHz + BW - 0,5 MHz (which means this may partly overlap with the previous 1 MHz segment).

Step 3: (segment 2 483,5 MHz + BW to 2 483,5 MHz + 2BW)

Change the centre frequency of the analyser to 2 484 MHz + BW and perform the measurement for the first 1 MHz segment within range 2 483,5 MHz + BW to 2 483,5 MHz + 2BW. Increase the centre frequency in 1 MHz steps and repeat the measurements to cover this whole range. The centre frequency of the last 1 MHz segment shall be set to 2 483,5 MHz + 2 BW - 0,5 MHz(which means this may partly overlap with the previous 1 MHz segment).

Step 4: (segment 2 400 MHz - BW to 2 400 MHz)

Change the centre frequency of the analyser to 2 399,5 MHz and perform the measurement for the first 1 MHz segment within range 2 400 MHz - BW to 2 400 MHz Reduce the centre frequency in 1 MHz steps and repeat the measurements to cover this whole range. The centre

	frequency of the last 1 MHz segment shall be set to 2 400 MHz - 2BW + 0,5 MHz(which means this may partly overlap with the previous 1 MHz segment). **Step 5: (segment 2 400 MHz - 2BW to 2 400 MHz - BW)** Change the centre frequency of the analyser to 2 399,5 MHz - BW and perform the measurement for the first 1 MHz segment within range 2 400 MHz - 2BW to 2 400 MHz - BW. Reduce the centre frequency in 1 MHz steps and repeat the measurements to cover this whole range. The centre frequency of the last 1 MHz segment shall be set to 2 400 MHz - 2BW + 0.5 MHz(which means this may partly overlap with the previous 1 MHz segment). **Step 6:** In case of conducted measurements on equipment with a single transmit chain, the declared antenna assembly gain "G" in dBi shall be added to the results for each of the 1 MHz segments and compared with the limits provided by the mask given in figures 1 or 3. If more than one antenna assembly is intended for this power setting, the antenna with the highest gain shall be considered. In case of conducted measurements on smart antenna systems (equipment with multiple transmit chains), the measurements need to be repeated for each of the active transmit chains. The declared antenna assembly gain "G" in dBi for a single antenna shall be added to these results. If more than one antenna assembly is intended for this power setting, the antenna with the highest gain shall be considered. Comparison with the applicable limits shall be done using any of the options given below: Option 1: the results for each of the transmit chains for the corresponding 1 MHz segments shall be added. The additional beamforming gain "Y" in dB shall be added as well and the resulting values compared with the limits provided by the mask given in figures 1 or 3. Option 2: the limits provided by the mask given in figures 1 or 3 shall be reduced by 10 x log10(Ach) and the additional beamforming gain "Y" in dB. The results for each of the transmit chains shall be individually compared with these reduced limits. ***Note 2:*** *Ach refers to the number of active transmit chains.* *It shall be recorded whether the equipment complies with the mask provided in figures 1 or 3.*
Test Instrument:	Refer to Item 3.3
Test Result:	PASS

Hotline: 400-6611-140 Tel: 86-755-27673339 Fax: 86-755-27673332 http://www.tct-lab.com

6.4.2. Test data

(1M)

GFSK							
Test conditions	EUT Config.	Measurement（dBm/MHz）	Read Level (dBm)	Antenna Gain(dBi)	Level dBm(EIRP)	Limit dBm(EIRP)	Result
Normal	Lowest	2400-BW~2400	-65.14	-1	-66.14	-10	Pass
		2400-2BW~2400-BW	-69.07	-1	-70.07	-20	
	Highest	2483.5~2483.5+BW	-69.41	-1	-70.41	-10	
		2483.5+BW~2483.5+2BW	-69.41	-1	-70.41	-20	
Cable Loss=0.5dB, Antenna Gain= -1dBi, this factors have been set in test software.							

(2M)

GFSK							
Test conditions	EUT Config.	Measurement（dBm/MHz）	Read Level (dBm)	Antenna Gain(dBi)	Level dBm(EIRP)	Limit dBm(EIRP)	Result
Normal	Lowest	2400-BW~2400	-45.72	-1	-46.72	-10	Pass
		2400-2BW~2400-BW	-69.05	-1	-70.05	-20	
	Highest	2483.5~2483.5+BW	-69.41	-1	-70.41	-10	
		2483.5+BW~2483.5+2BW	-69.42	-1	-70.42	-20	
Cable Loss=0.5dB, Antenna Gain= -1dBi, this factors have been set in test software.							

Note: Normal = Normal Voltage, Normal Temperature;

6.5. Transmitter unwanted emissions in the spurious domain

6.5.1. Test Specification

Test Requirement:	ETSI EN 300 328 clause 4.3.2.9
Test Method:	ETSI EN 300 328 clause 5.4.9.2

Limit:

Frequency Range	Maximum power e.r.p. (≤ 1 GHz) e.i.r.p. (> 1 GHz)	Bandwidth
30 MHz to 47 MHz	-36 dBm	100 kHz
47 MHz to 74 MHz	-54 dBm	100 kHz
74 MHz to 87.5 MHz	-36 dBm	100 kHz
87.5 MHz to 118 MHz	-54 dBm	100 kHz
118 MHz to 174 MHz	-36 dBm	100 kHz
174 MHz to 230 MHz	-54 dBm	100 kHz
230 MHz to 470 MHz	-36 dBm	100 kHz
470 MHz to 694 MHz	-54 dBm	100 kHz
694 MHz to 1 GHz	-36 dBm	100 kHz
1 GHz to 12.75 GHz	-30 dBm	1 MHz

Test Setup:

For Conducted

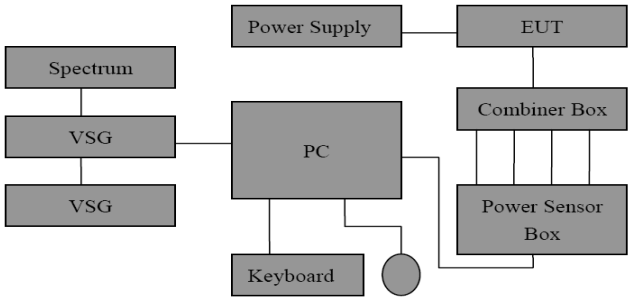

For Radiated

Below 1GHz

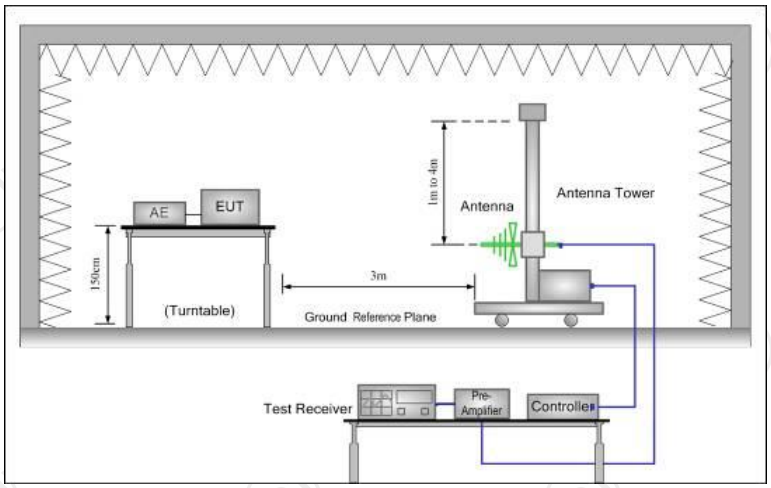

	Above 1GHz 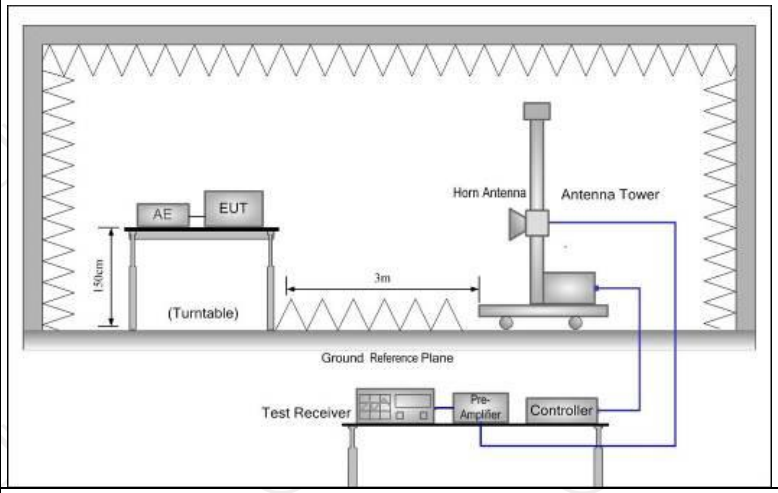
Test Mode:	Transmitting Mode
Test Procedure:	**1. Pre-scan** The test procedure below shall be used to identify potential unwanted emissions of the UUT. **Step 1:** The sensitivity of the measurement set-up should be such that the noise floor is at least 12 dB below the limits given in tables 1 or 4. **Step 2:** The emissions over the range 30 MHz to 1 000 MHz shall be identified. Spectrum analyser settings: Resolution BW: 100 kHz Video BW 300 kHz Filter type 3 dB(Gaussian) Detector mode: Peak Trace Mode: Max Hold Sweep Points: ≥ 19400 ***NOTE 1:*** *For spectrum analysers not supporting this high number of sweep points, the frequency band may need to be segmented.* Sweep time: For non continuous transmissions (duty cycle less than 100 %), the sweep time shall be sufficiently long, such that for each 100 kHz frequency step, the measurement time is greater than two transmissions of the UUT, on any channel. For Frequency Hopping equipment operating in a normal operating (hopping not disabled) mode, the sweep time shall be further increased to capture multiple transmissions on the same hopping frequency in different hopping sequences. ***NOTE 2:*** *The above sweep time setting may result in long measuring times in case of frequency hopping equipment. To avoid such long measuring times, an FFT analyser could be used.* Allow the trace to stabilize. Any emissions identified during

the sweeps above and that fall within the 6 dB range below the applicable limit or above, shall be individually measured using the procedure in clause 5.4.9.2.1.3 and compared to the limits given in table 4 or table 12.

Step 3:

The emissions over the range 1 GHz to 12,75 GHz shall be identified. Spectrum analyser settings:

Resolution BW:	1 MHz
Video BW	3 MHz
Filter type	3 dB(Gaussian)
Detector mode:	Peak
Trace Mode:	Max Hold
Sweep Points:	≥ 23500

NOTE 3: *For spectrum analysers not supporting this high number of sweep points, the frequency band may need to be segmented.*

Sweep time:	For non continuous transmissions (duty cycle less than 100 %), the sweep time shall be sufficiently long, such that for each 1 MHz frequency step, the measurement time is greater than two transmissions of the UUT, on any channel. For Frequency Hopping equipment operating in a normal operating (hopping not disabled) mode, the sweep time shall be further increased to capture multiple transmissions on the same hopping frequency in different hopping sequences.

NOTE 4: The above sweep time setting may result in long measuring times in case of frequency hopping equipment. To avoid such long measuring times, an FFT analyser could be used.

Allow the trace to stabilize. Any emissions identified during the sweeps above that fall within the 6 dB range below the applicable limit or above, shall be individually measured using the procedure in clause 5.4.9.2.1.3 and compared to the limits given in table 4 or table 12.Frequency Hopping equipment may generate a block (or several blocks) of spurious emissions anywhere within the spurious domain. If this is the case, only the highest peak of each block of emissions shall be measured using the procedure in clause 5.3.10.2.1.3.

Step 4:

In case of conducted measurements on smart antenna systems (equipment with multiple transmit chains), the steps 2 and 3 need to be repeated for each of the active transmit chains (Ach).The limits used to identify emissions during this pre-scan need to be reduced with 10 × $\log_{10}$ (Ach) (number of active transmit chains).

2. Measurement of the emissions identified during the pre-scan

The steps below shall be used to accurately measure the individual unwanted emissions identified during the pre-scan measurements above. This method assumes the spectrum analyser has a Time Domain Power function.

Step 1:

The level of the emissions shall be measured using the following spectrum analyser settings:

Measurement Mode:	Time Domain Power
Centre Frequency:	Frequency of emission identified during the pre-scan
Resolution BW:	100 kHz (< 1 GHz) / 1 MHz (> 1 GHz)
Video BW	300 kHz (< 1 GHz) / 3 MHz (> 1 GHz)
Frequency Span:	Zero Span
Sweep mode:	Single Sweep
Sweep time:	>120% of the duration of the longest burst detected during the measurement of the RF Output Power
Sweep points	Sweep time [μs] / (1 μs) with a maximum of 30000
Trigger:	Video (burst signals) or Manual (continuous signals)
Detector:	RMS

Step 2:

Set a window where the start and stop indicators match the start and end of the burst with the highest level and record the value of the power measured within this window. If the spurious emission to be measured is a continuous transmission, the measurement window shall be set to match the start and stop times of the sweep.

Step 3:

In case of conducted measurements on smart antenna systems (equipment with multiple transmit chains), step 2 needs to be repeated for each of the active transmit chains (A_{ch}).

Sum the measured power (within the observed window) for each of the active transmit chains.

Step 4:

The value defined in step 3 shall be compared to the limits defined in tables 1 and 4.

Test Instrument:	Refer to Item 3.3
Test Result:	PASS

Hotline: 400-6611-140 Tel: 86-755-27673339 Fax: 86-755-27673332 http://www.tct-lab.com

6.5.2. Test Data

The lowest channel				
Frequency (MHz)	Spurious Emission		Limit dBm(EIRP)	Test Result
	polarization	Level dBm(EIRP)		
97.67	Vertical	-63.64	-54.00	PASS
4804.00	V	-46.23	-30.00	
7206.00	V	-47.16	-30.00	
-	V	-	-	
97.67	Horizontal	-63.99	-54.00	
4804.00	H	-47.14	-30.00	
7206.00	H	-48.01	-30.00	
-	H	-	-	
The highest channel				
Frequency (MHz)	Spurious Emission		Limit dBm(EIRP)	Test Result
	polarization	Level dBm(EIRP)		
83.62	Vertical	-62.97	-36.00	PASS
4960.00	V	-46.45	-30.00	
7440.00	V	-46.80	-30.00	
-	V	-	-	
83.62	Horizontal	-63.48	-36.00	
4960.00	H	-47.63	-30.00	
7440.00	H	-47.31	-30.00	
-	H	-	-	

Note: *Speed for 1M and 2M modulations of EUT have been tested, but the test data only show the worst case in this report, and we found the worst case is 2M speed modulation. The test frequency range is 30MHz to 12,75GHz, the reading of other frequencies emissions is attenuated more than 20 dB below the limits or the field strength is too small to be measured.*

7. Receive Requirement

7.1. Spurious Emissions

7.1.1. Test Specification

Test Requirement:	ETSI EN 300 328 clause 4.3.2.10
Test Method:	ETSI EN 300 328 clause 5.4.10.2
Limit:	

Frequency	Maximum power e.r.p. (≤ 1 GHz) e.i.r.p. (> 1 GHz)	Measurement bandwidth
30MHz to 1000 MHz	-57 dBm	100 kHz
1GHz to 12.75GHz	-47 dBm	1 MHz

Test Setup:

For Conducted

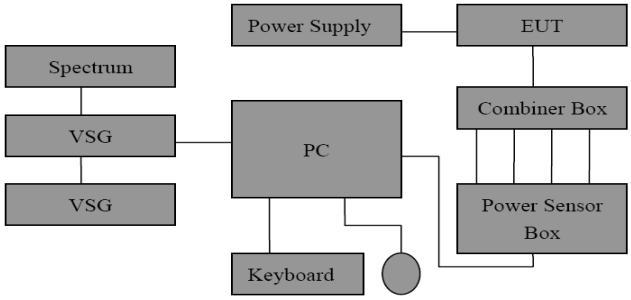

For Radiated

Below 1GHz

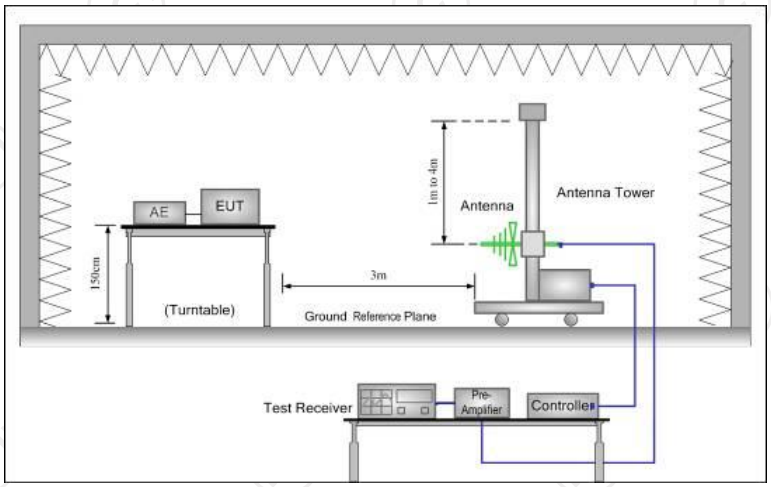

	Above 1GHz 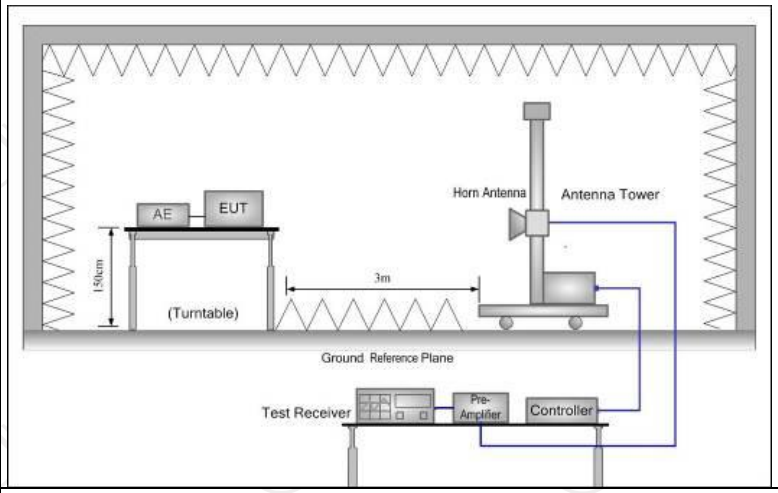
Test Mode:	Receive Mode
Test Procedure:	**1. Pre-scan** The test procedure below shall be used to identify potential unwanted emissions of the UUT. **Step 1:** The sensitivity of the spectrum analyser should be such that the noise floor is at least 12 dB below the limits given in tables 2 or 5. **Step 2:** The emissions over the range 30 MHz to 1 000 MHz shall be identified. Spectrum analyser settings: Resolution BW: 100 kHz Video BW 300 kHz Filter type 3 dB(Gaussian) Detector mode: Peak Trace Mode: Max Hold Sweep Points: ≥ 19400 Sweep time Auto Wait for the trace to stabilize. Any emissions identified during the sweeps above and that fall within the 6 dB range below the applicable limit or above, shall be individually measured using the procedure in clause 5.4.10.2.1.3 and compared to the limits given in table 5 or table 13. **Step 3:** The emissions over the range 1 GHz to 12,75 GHz shall be identified. Spectrum analyser settings: Resolution BW: 1 MHz Video BW 3 MHz Filter type 3 dB(Gaussian) Detector mode: Peak Trace Mode: Max Hold Sweep Points: ≥ 23500

NOTE: For spectrum analysers not supporting this high number of sweep points, the frequency band may need to be segmented.

Sweep time:	Auto

Wait for the trace to stabilize. Any emissions identified during the sweeps above that fall within the 6 dB range below the applicable limit or above, shall be individually measured using the procedure in clause 5.4.10.2.1.3 and compared to the limits given in table 5 or table 13.
Frequency Hopping equipment may generate a block (or several blocks) of spurious emissions anywhere within the spurious domain. If this is the case, only the highest peak of each block of emissions shall be measured using the procedure in clause 5.4.10.2.1.3.

Step 4:

In case of conducted measurements on smart antenna systems (equipment with multiple transmit chains), the steps 2 and 3 need to be repeated for each of the active transmit chains (Ach).The limits used to identify emissions during this pre-scan need to be reduced with $10 \times \log_{10}$ (Ach) (number of active transmit chains).

2. Measurement of the emissions identified during the pre-scan

The steps below shall be used to accurately measure the individual unwanted emissions identified during the pre-scan measurements above. This method assumes the spectrum analyser has a Time Domain Power function.

Step 1:

The level of the emissions shall be measured using the following spectrum analyser settings:

Measurement Mode	Time Domain Power
Centre Frequency:	Frequency of emission identified during the pre-scan
Resolution BW:	100 kHz (< 1 GHz) / 1 MHz (> 1 GHz)
Video BW	300 kHz (< 1 GHz) / 3 MHz (> 1 GHz)
Frequency Span:	Zero Span
Sweep mode:	Single Sweep
Sweep time:	30ms
Sweep points	>30000
Trigger:	Video (for burst signals) or Manual (for continuous signals)
Detector:	RMS

Step 2:

Set a window where the start and stop indicators match the

	start and end of the burst with the highest level and record the value of the power measured within this window. If the spurious emission to be measured is a continuous transmission, the measurement window shall be set to the start and stop times of the sweep. **Step 3:** In case of conducted measurements on smart antenna systems (equipment with multiple receive chains), step 2 needs to be repeated for each of the active receive chains (A_{ch}). Sum the measured power (within the observed window) for each of the active receive chains **Step 4:** The values defined in step 3 shall be compared to the limits defined in tables 2 and 5.
Test Instrument:	Refer to Item 3.3
Test Result:	PASS

7.1.2. Test Data

The lowest channel				
Frequency (MHz)	Spurious Emission		Limit dBm(EIRP)	Test Result
	polarization	Level dBm(EIRP)		
97.67	Vertical	-66.36	-57.00	PASS
4804.00	V	-54.42	-47.00	
7206.00	V	-55.91	-47.00	
-	V	-	-	
97.67	Horizontal	-67.79	-57.00	
4804.00	H	-55.54	-47.00	
7206.00	H	-55.10	-47.00	
-	H	-	-	
The highest channel				
Frequency (MHz)	Spurious Emission		Limit dBm(EIRP)	Test Result
	polarization	Level dBm(EIRP)		
83.62	Vertical	-67.58	-57.00	PASS
4960.00	V	-54.96	-47.00	
7440.00	V	-55.47	-47.00	
-	V	-	-	
83.62	Horizontal	-67.53	-57.00	
4960.00	H	-55.64	-47.00	
7440.00	H	-56.41	-47.00	
-	H	-		

Note: *Speed for 1M and 2M modulations of EUT have been tested, but the test data only show the worst case in this report, and we found the worst case is 2M speed modulation. The test frequency range is 30MHz to 12,75GHz, the reading of other frequencies emissions is attenuated more than 20 dB below the limits or the field strength is too small to be measured.*

7.2. Receiver Blocking

7.2.1. Test Specification

<table>
<tr><td>Test Requirement:</td><td>ETSI EN 300 328 clause 4.3.2.11</td></tr>
<tr><td>Test Method:</td><td>ETSI EN 300 328 clause 5.4.11.2</td></tr>
<tr><td>Category:</td><td>Receiver category 1
Adaptive equipment with a maximum RF output power greater than 10 dBm e.i.r.p. shall be considered as receiver category 1 equipment;
Receiver category 2
Non-adaptive equipment with a Medium Utilization (MU) factor greater than 1 % and less than or equal to 10 % or adaptive equipment with a maximum RF output power of 10 dBm e.i.r.p. shall be considered as receiver category 2 equipment;
Receiver category 3
Non-adaptive equipment with a maximum Medium Utilization (MU) factor of 1 % or adaptive equipment with a maximum RF output power of 0 dBm e.i.r.p. shall be considered as receiver category 3equipment.</td></tr>
<tr><td>Limit:</td><td>Receiver category 1
Table 14: Receiver Blocking parameters for Receiver Category 1 equipment
<table>
<tr><th>Wanted signal mean power from companion device (dBm) (see notes 1 and 4)</th><th>Blocking signal frequency (MHz)</th><th>Blocking signal power (dBm) (see note 4)</th><th>Type of blocking signal</th></tr>
<tr><td>(-133 dBm + 10 × $\log_{10}$(OCBW)) or -68 dBm whichever is less (see note 2)</td><td>2 380
2 504</td><td rowspan="2">-34</td><td rowspan="2">CW</td></tr>
<tr><td>(-139 dBm + 10 × $\log_{10}$(OCBW)) or -74 dBm whichever is less (see note 3)</td><td>2 300
2 330
2 360
2 524
2 584
2 674</td></tr>
<tr><td colspan="4">NOTE 1: OCBW is in Hz.
NOTE 2: In case of radiated measurements using a companion device and the level of the wanted signal from the companion device cannot be determined, a relative test may be performed using a wanted signal up to P_{min} + 26 dB where P_{min} is the minimum level of wanted signal required to meet the minimum performance criteria as defined in clause 4.3.1.12.3 in the absence of any blocking signal.
NOTE 3: In case of radiated measurements using a companion device and the level of the wanted signal from the companion device cannot be determined, a relative test may be performed using a wanted signal up to P_{min} + 20 dB where P_{min} is the minimum level of wanted signal required to meet the minimum performance criteria as defined in clause 4.3.1.12.3 in the absence of any blocking signal.
NOTE 4: The level specified is the level at the UUT receiver input assuming a 0 dBi antenna assembly gain. In case of conducted measurements, this level has to be corrected for the (in-band) antenna assembly gain (G). In case of radiated measurements, this level is equivalent to a power flux density (PFD) in front of the UUT antenna with the UUT being configured/positioned as recorded in clause 5.4.3.2.2.</td></tr>
</table>
Receiver category 2</td></tr>
</table>

Table 15: Receiver Blocking parameters receiver Category 2 equipment

Wanted signal mean power from companion device (dBm) (see notes 1 and 3)	Blocking signal frequency (MHz)	Blocking signal power (dBm) (see note 3)	Type of blocking signal
(-139 dBm + 10 × $\log_{10}$(OCBW) + 10 dB) or (-74 dBm + 10 dB) whichever is less (see note 2)	2 380 2 504 2 300 2 584	-34	CW

NOTE 1: OCBW is in Hz.
NOTE 2: In case of radiated measurements using a companion device and the level of the wanted signal from the companion device cannot be determined, a relative test may be performed using a wanted signal up to P_{min} + 26 dB where P_{min} is the minimum level of wanted signal required to meet the minimum performance criteria as defined in clause 4.3.1.12.3 in the absence of any blocking signal.
NOTE 3: The level specified is the level at the UUT receiver input assuming a 0 dBi antenna assembly gain. In case of conducted measurements, this level has to be corrected for the (in-band) antenna assembly gain (G). In case of radiated measurements, this level is equivalent to a power flux density (PFD) in front of the UUT antenna with the UUT being configured/positioned as recorded in clause 5.4.3.2.2.

Receiver category 3

Table 16: Receiver Blocking parameters receiver Category 3 equipment

Wanted signal mean power from companion device (dBm) (see notes 1 and 3)	Blocking signal frequency (MHz)	Blocking signal power (dBm) (see note 3)	Type of blocking signal
(-139 dBm + 10 × $\log_{10}$(OCBW) + 20 dB) or (-74 dBm + 20 dB) whichever is less (see note 2)	2 380 2 504 2 300 2 584	-34	CW

NOTE 1: OCBW is in Hz.
NOTE 2: In case of radiated measurements using a companion device and the level of the wanted signal from the companion device cannot be determined, a relative test may be performed using a wanted signal up to P_{min} + 30 dB where P_{min} is the minimum level of wanted signal required to meet the minimum performance criteria as defined in clause 4.3.1.12.3 in the absence of any blocking signal.
NOTE 3: The level specified is the level at the UUT receiver input assuming a 0 dBi antenna assembly gain. In case of conducted measurements, this level has to be corrected for the (in-band) antenna assembly gain (G). In case of radiated measurements, this level is equivalent to a power flux density (PFD) in front of the UUT antenna with the UUT being configured/positioned as recorded in clause 5.4.3.2.2.

Test Setup:

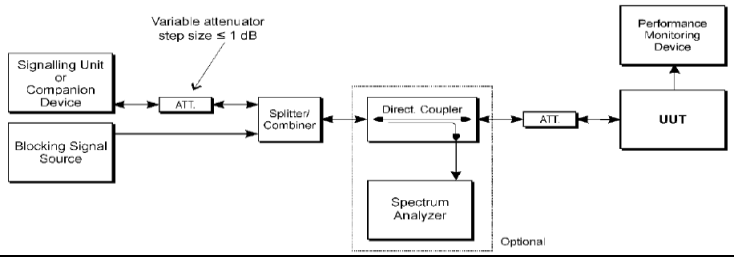

Test Mode: Normal operation Mode

Test Procedure:	Step 1: For non-FHSS equipment, the UUT shall be set to the lowest operating channel on which the blocking test has to be performed (see clause 5.4.11.1). Step 2: The blocking signal generator is set to the first frequency as defined in the appropriate table corresponding to the receiver category and type of equipment. Step 3: With the blocking signal generator switched off, a communication link is established between the UUT and the associated companion device using the test setup shown in figure 6. Unless the option provided in note 2 of the applicable table referred to in clause 5.4.11.2.1 is used, the level of the wanted signal shall be set to the value provided in the table corresponding to the receiver category and type of equipment. The test procedure defined in clause 5.4.2, and more in particular clause 5.4.2.2.1.2, can be used to measure the (conducted) level of the wanted signal however no correction shall be made for antenna gain of the companion device (step 6 in clause 5.4.2.2.1.2 shall be ignored). This level may be measured directly at the output of the companion device and a correction is made for the coupling loss into the UUT. The actual level for the wanted signal shall be recorded in the test report. When the option provided in note 2 of the applicable table referred to in clause 5.4.11.2.1 is used, the attenuation of the variable attenuator shall be increased in 1 dB steps to a value at which the minimum performance criteria as specified in clause 4.3.1.12.3 or clause 4.3.2.11.3 is still met. The resulting level for the wanted signal at the input of the UUT is Pmin. This signal level (Pmin) is increased by the value provided in note 2 of the applicable table corresponding to the receiver category and type of equipment. Step 4: The blocking signal at the UUT is set to the level provided in the table corresponding to the receiver category and type of equipment. If the performance criteria as specified in clause 4.3.1.12.3 or clause 4.3.2.11.3 are met then proceed to step 6. Step 5: If the performance criteria as specified in clause 4.3.1.12.3 or clause 4.3.2.11.3 is not met, step 3 and step 4 shall be repeated after that the frequency of the blocking signal set in step 2 has been increased with a value equal to the Occupied Channel Bandwidth except: - For the blocking frequency 2 380 MHz, where this frequency offset shall be less than or equal to 10 MHz. If this frequency offset is more than 7 MHz, the level of the wanted signal shall

	be increased by 3 dB. - For the blocking frequency 2 503,5 MHz, where this frequency offset shall be less than or equal to 10 MHz. If this frequency offset is more than 7 MHz, the level of the wanted signal shall be decreased by 3 dB. If the performance criteria as specified in clause 4.3.1.12.3 or clause 4.3.2.11.3 is still not met, step 3 and step 4 shall be repeated after that the frequency of the blocking signal set in step 2 has been decreased with a value equal to the Occupied Channel Bandwidth except: - For the blocking frequency 2 380 MHz, where this frequency offset shall be less than or equal to 10 MHz. If this frequency offset is more than 7 MHz, the level of the wanted signal shall be decreased by 3 dB. - For the blocking frequency 2 503,5 MHz, where this frequency offset shall be less than or equal to 10 MHz. If this frequency offset is more than 7 MHz, the level of the wanted signal shall be increased by 3 dB. If the performance criteria as specified in clause 4.3.1.12.3 or clause 4.3.2.11.3 is still not met, the UUT fails to comply with the Receiver Blocking requirement and step 6 and step 7 are no longer required. It shall be recorded in the test report whether the shift of blocking frequencies as described in the present step was used. Step 6: Repeat step 4 and step 5 for each remaining combination of frequency and level for the blocking signal as provided in the table corresponding to the receiver category and type of equipment. Step 7: For non-FHSS equipment, repeat step 2 to step 6 with the UUT operating at the highest operating channel on which the blocking test has to be performed (see clause 5.4.11.1). Step 8: It shall be assessed and recorded in the test report whether the UUT complies with the Receiver Blocking requirement.
Test Instrument:	Refer to Item 3.3
Test Result:	PASS

7.2.2. Test data

(1M):

GFSK		Lowest Channel			
Wanted signal mean power (dBm)	Blocking signal frequency (MHz)	Blocking signal power (dBm)	Result (%)	Limit (%)	Verdict
-58.83	2380	-35	0.4	≤10	PASS
-58.83	2504	-35	0.2		
-58.83	2300	-35	0.4		
-58.83	2584	-35	0.4		

Note: 1. OCBW= $1.04*10^6$Hz, (-139 dBm + 10 × log_{10}(OCBW)+20db)= -58.83dbm; so the Wanted signal mean Power is -58.83dbm
2. Blocking signal power should be equal or greater than -34dBm + Antenna gain, Antenna gain is -1dBi.
3. PER has been monitored is 0.4%
4. Receiver Category: 3

GFSK		Highest Channel			
Wanted signal mean power (dBm)	Blocking signal frequency (MHz)	Blocking signal power (dBm)	Result (%)	Limit (%)	Verdict
-58.83	2380	-35	0.2	≤10	PASS
-58.83	2504	-35	0.2		
-58.83	2300	-35	0.4		
-58.83	2584	-35	0.2		

Note: 1. OCBW= $1.04*10^6$Hz, (-139 dBm + 10 × log_{10}(OCBW)+20db)= -58.83dbm; so the Wanted signal mean Power is -58.83dbm
2. Blocking signal power should be equal or greater than -34dBm + Antenna gain, Antenna gain is -1dBi.
3. PER has been monitored is 0.4%.
4. Receiver Category: 3

(2M):

GFSK		Lowest Channel			
Wanted signal mean power (dBm)	Blocking signal frequency (MHz)	Blocking signal power (dBm)	Result (%)	Limit (%)	Verdict
-55.82	2380	-35	0.5	≤10	PASS
-55.82	2504	-35	0.9		
-55.82	2300	-35	0.4		
-55.82	2584	-35	0.3		

*Note: 1. OCBW= 2.08*10^{6}Hz, (-139 dBm + 10 × log$_{10}$(OCBW)+20db)= -55.82dbm; so the Wanted signal mean Power is -55.82dbm*
2. Blocking signal power should be equal or greater than -34dBm + Antenna gain, Antenna gain is -1dBi.
3. PER has been monitored is 0.9%
4. Receiver Category: 3

GFSK		Highest Channel			
Wanted signal mean power (dBm)	Blocking signal frequency (MHz)	Blocking signal power (dBm)	Result (%)	Limit (%)	Verdict
-55.82	2380	-35	0.5	≤10	PASS
-55.82	2504	-35	0.9		
-55.82	2300	-35	0.3		
-55.82	2584	-35	0.4		

*Note: 1. OCBW= 2.08*10^{6}Hz, (-139 dBm + 10 × log$_{10}$(OCBW)+20db)= -55.82dbm; so the Wanted signal mean Power is -55.82dbm*
2. Blocking signal power should be equal or greater than -34dBm + Antenna gain, Antenna gain is -1dBi.
3. PER has been monitored is 0.9%.
4. Receiver Category: 3

8. Photographs of Test Configuration

Radiated Emission

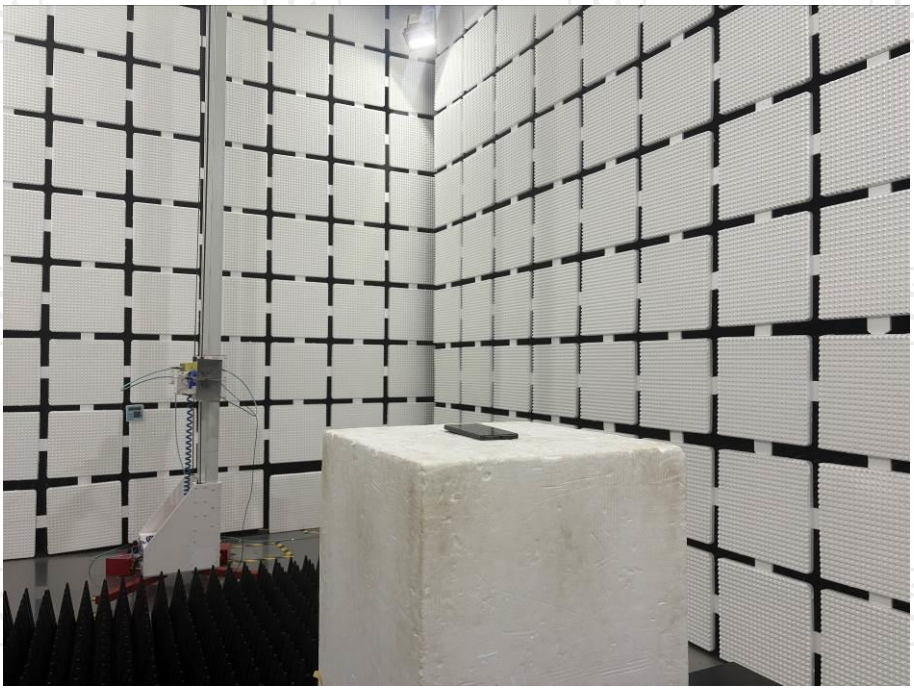

9. Photographs of EUT

Please refer to document Appendix No.: TCT250324E012-B & TCT250324E012-C

ANNEX E

E.1 Information as required by EN 300 328 V2.2.2, clause 5.4.1

In accordance with EN 300 328, clause 5.4.1, the following information is provided by the supplier.

a) The type of modulation used by the equipment:

☐FHSS

☒Other forms of modulation

b) In case of FHSS modulation:

- In case of non-Adaptive Frequency Hopping equipment:
  The number of Hopping Frequencies:
- In case of Adaptive Frequency Hopping Equipment:
  The maximum number of Hopping Frequencies:
  The minimum number of Hopping Frequencies:
- The Dwell Time:

c) Adaptive / non-adaptive equipment:

☐Non-adaptive Equipment

☒Adaptive Equipment without the possibility to switch to a non-adaptive mode

☐Adaptive Equipment which can also operate in a non-adaptive mode

d) In case of adaptive equipment:

The Channel Occupancy Time implemented by the equipment: ms

☐The equipment has implemented an LBT based DAA mechanism

- In case of equipment using modulation different from FHSS:

  ☐The equipment is Frame Based equipment

  ☐The equipment is Load Based equipment

  ☐The equipment can switch dynamically between Frame Based and Load Based equipment

  The CCA time implemented by the equipment: µs

  ☒The equipment has implemented an non-LBT based DAA mechanism

  ☐The equipment can operate in more than one adaptive mode

e) In case of non-adaptive Equipment:

The maximum RF Output Power (e.i.r.p.): dBm

The maximum (corresponding) Duty Cycle: %

Equipment with dynamic behaviour, that behaviour is described here. (e.g. the different combinations of duty cycle and corresponding power levels to be declared):

Hotline: 400-6611-140 Tel: 86-755-27673339 Fax: 86-755-27673332 http://www.tct-lab.com

f) The worst case operational mode for each of the following tests:

- RF Output Power
  -7.01dBm
- Power Spectral Density
  -7.08dBm/MHz
- Duty cycle, Tx-Sequence, Tx-gap
  N/A
- Dwell time, Minimum Frequency Occupation & Hopping Sequence (only for FHSS equipment)
  N/A
- Hopping Frequency Separation (only for FHSS equipment)
  N/A
- Medium Utilisation
  N/A
- Adaptivity & Receiver Blocking
  N/A
- Occupied Channel Bandwidth
  2.08MHz
- Transmitter unwanted emissions in the OOB domain
  -46.72dBm
- Transmitter unwanted emissions in the spurious domain
  -46.23dBm
- Receiver spurious emissions
  -54.42dBm

g) The different transmit operating modes (tick all that apply):

☒Operating mode 1: Single Antenna Equipment

☒Equipment with only 1 antenna

☐Equipment with 2 diversity antennas but only 1 antenna active at any moment in time

☐Smart Antenna Systems with 2 or more antennas, but operating in a (legacy) mode where only 1 antenna is used. (e.g. IEEE 802.11™ [i.3] legacy mode in smart antenna systems)

☐Operating mode 2: Smart Antenna Systems - Multiple Antennas without beam forming

☐Single spatial stream / Standard throughput / (e.g. IEEE 802.11™ [i.3] legacy mode)

☐High Throughput (> 1 spatial stream) using Occupied Channel Bandwidth 1

☐High Throughput (> 1 spatial stream) using Occupied Channel Bandwidth 2

NOTE: Add more lines if more channel bandwidths are supported.

☐Operating mode 3: Smart Antenna Systems - Multiple Antennas with beam forming

☐Single spatial stream / Standard throughput (e.g. IEEE 802.11™ [i.3] legacy mode)

☐High Throughput (> 1 spatial stream) using Occupied Channel Bandwidth 1
☐High Throughput (> 1 spatial stream) using Occupied Channel Bandwidth 2

NOTE: Add more lines if more channel bandwidths are supported.

h) In case of Smart Antenna Systems:

- The number of Receive chains:
- The number of Transmit chains:

☐Symmetrical power distribution
☐Asymmetrical power distribution

In case of beam forming, the maximum beam forming gain:

NOTE: Beam forming gain does not include the basic gain of a single antenna.

i) Operating Frequency Range(s) of the equipment:

- Operating Frequency Range 1: 2402MHz to2480MHz
- Operating Frequency Range 2: MHz to MHz

NOTE: Add more lines if more Frequency Ranges are supported.

j) Occupied Channel Bandwidth(s):

- Occupied Channel Bandwidth 1: 2.08MHz
- Occupied Channel Bandwidth 2: MHz

NOTE: Add more lines if more channel bandwidths are supported.

k) Type of Equipment (stand-alone, combined, plug-in radio device, etc.):

☒Stand-alone
☐Combined Equipment (Equipment where the radio part is fully integrated within another type of equipment)
☐Plug-in radio device (Equipment intended for a variety of host systems)
☐Other

l) The extreme operating conditions that apply to the equipment:

Operating temperature range: -20°C to 35°C
Operating voltage range: 3.5V to 4.35V ☐AC ☒DC
Details provided are for the: ☒stand-alone equipment
☐Combined (or host) equipment
☐Test jig

m) The intended combination(s) of the radio equipment power settings and one or more antenna assemblies and their corresponding e.i.r.p levels:

- Antenna Type:

☒Integral Antenna
Antenna Gain: -1dBi
If applicable, additional beamforming gain (excluding basic antenna gain): dB
☐Temporary RF connector provided
☐No temporary RF connector provided
☐Dedicated Antennas (equipment with antenna connector)
☐Single power level with corresponding antenna(s)
☐Multiple power settings and corresponding antenna(s)
Number of different Power Levels:

Power Level 1:		dBm
Power Level 2:		dBm
Power Level 3:		dBm

NOTE 1: Add more lines in case the equipment has more power levels.
NOTE 2: These power levels are conducted power levels (at antenna connector).

- For each of the Power Levels, provide the intended antenna assemblies, their corresponding gains (G) and the resulting e.i.r.p. levels also taking into account the beamforming gain (Y) if applicable

Power Level 1: dBm

Number of antenna assemblies provided for this power level:

Assembly #	Gain (dBi)	e.i.r.p. (dBm)	Part number or model name
1			
2			
3			
4			

NOTE: Add more rows in case more antenna assemblies are supported for this power level.

Power Level 2: dBm

Number of antenna assemblies provided for this power level:

Assembly #	Gain (dBi)	e.i.r.p. (dBm)	Part number or model name
1			
2			
3			
4			

NOTE: Add more rows in case more antenna assemblies are supported for this power level.

Power Level 3: dBm

Number of antenna assemblies provided for this power level:

Assembly #	Gain (dBi)	e.i.r.p. (dBm)	Part number or model name
1			
2			
3			

4			

NOTE: Add more rows in case more antenna assemblies are supported for this power level.

n) The nominal voltages of the stand-alone radio equipment or the nominal voltages of the combined (host) equipment or test jig in case of plug-in devices:

Details provided are for the: ☒stand-alone equipment
☐combined (or host) equipment
☐test jig

Supply Voltage ☐AC mains State AC voltage V
☒DC State DC voltage 3.87 V

In case of DC, indicate the type of power source
☐Internal Power Supply
☒External Power Supply or AC/DC adapter
☒Battery
☐Other:

o) Describe the test modes available which can facilitate testing:
Refer to clause 3.1

p) The equipment type (e.g. Bluetooth®, IEEE 802.11™ [i.3], proprietary, etc.):
Bluetooth®

s) Geo-location capability supported by the equipment:
☐Yes
☐The geographical location determined by the equipment as defined in clause 4.3.1.13.2 or clause 4.3.2.12.2 is not accessible to the user
☒No

t) Describe the minimum performance criteria that apply to the equipment (see clause 4.3.1.12.3 or clause 4.3.2.11.3):
The minimum performance criterion shall be a PER less than or equal to 10 %.
PER has been monitored is 0.9%.

.....

********END OF REPORT********